Speed Humps on Steep Streets

Gabriel Ho, P.E.
Livable Streets Subdivision
2019 ITE Western District Meeting

Co-Authors:
Kate Beck, SafeTREC
Casey Hildreth, SFMTA

Traffic Calming Program by the numbers

- 100+ applications per year
- 100+ speed humps or variants installed per year
- Speed humps reduce 85th %ile speeds by 6 mph

Traffic Calming Program Acceptance Criteria

- Proximity to schools, parks, senior centers
- Speed & Volume thresholds
- Restricted on arterials, multi-lane roads, grades >12%
- 8-12% case-by-case only

Roadway Slopes

9-12%

>12%

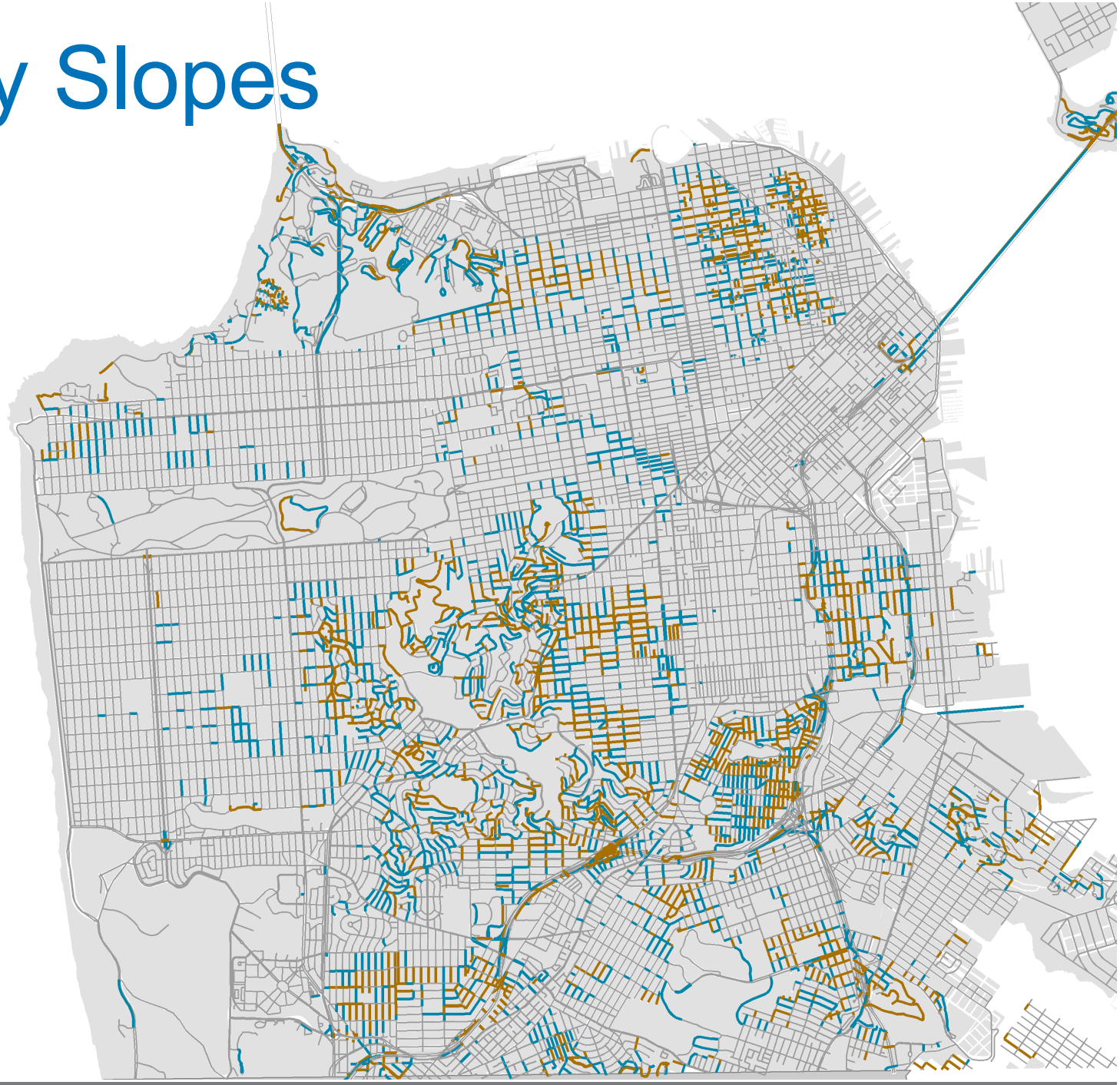

Question:

Do speed humps on steeper roadways present **traffic safety** or **driver/passenger comfort** issues?

Initial Research

- Literature Review
  - *ITE Guidelines for the Design and Application of Speed Humps (1993)*
- Interviews with other jurisdictions
  - Portland
  - New Jersey DOT
  - Delaware DOT

Field Test Locations:

- Four blocks with existing speed humps
- Blocks with slopes of 1%, 4%, 8%,13%

- Crash analysis
- Resident feedback

Field Testing Procedure:

Speed runs @ 15, 20, 25, 30mph

uphill and downhill over speed hump

1. Driver rating of vehicle control
2. Driver/Passenger rating of comfort
3. Measure acceleration during deflection

Field Testing Procedure:

Physics Toolbox Accelerometer

- g-Force in x, y, z axes
- Recording 200Hz
- Output to .CSV
- Averaged into 0.04sec bins

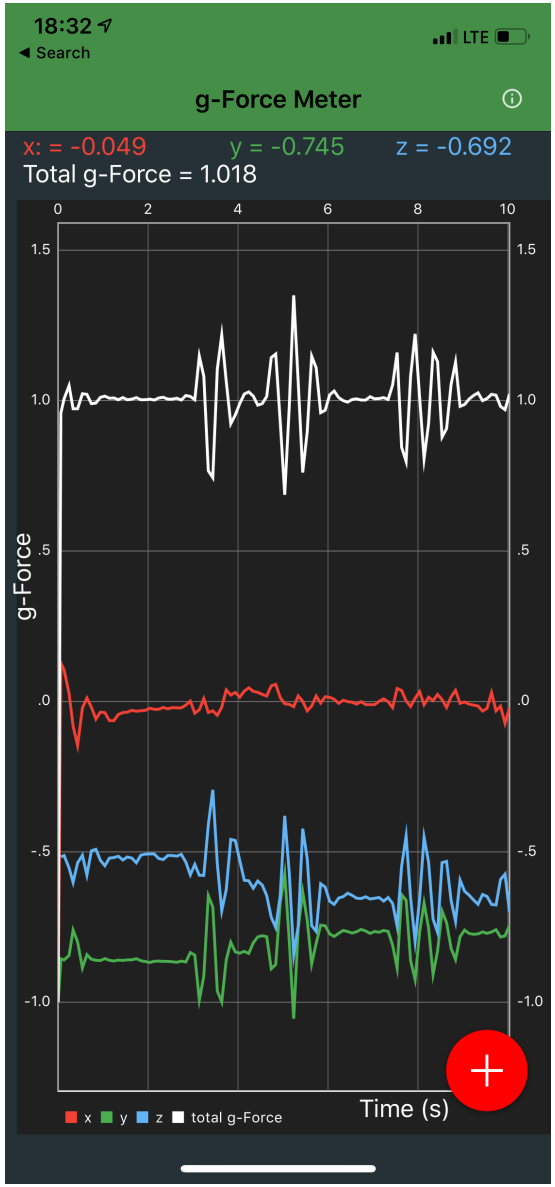

Accelerometer Reading

Field Test Findings:

g-force increases with speed, not slope

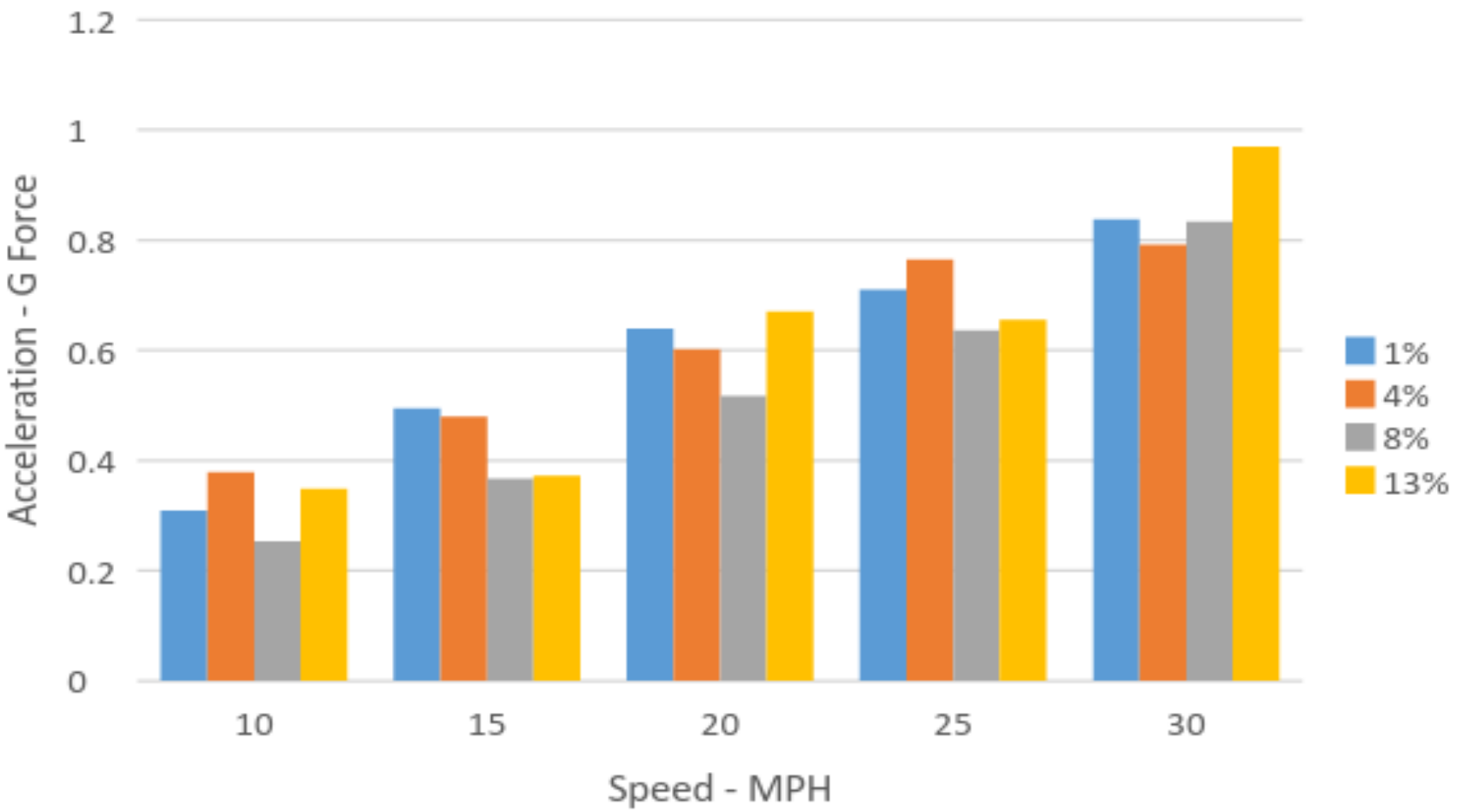

Conclusions:

Speed humps on various grades perform similarly:

- Crash history
- Comfort
- Deflection forces

Policy Change

- Increase standard max grade to 13%. >13% to be considered case-by-case
- Emphasis on advanced warning markings and advisory speed signs

Research Next Steps

- Effects on Bicycles, Heavy Vehicles
- Cold climates
- Slopes >13%

Thank You

Gabriel Ho

SFMTA Livable Streets

gabriel.ho@sfmta.com

sfmta.com/traffic-calming

SF Standard Speed Hump

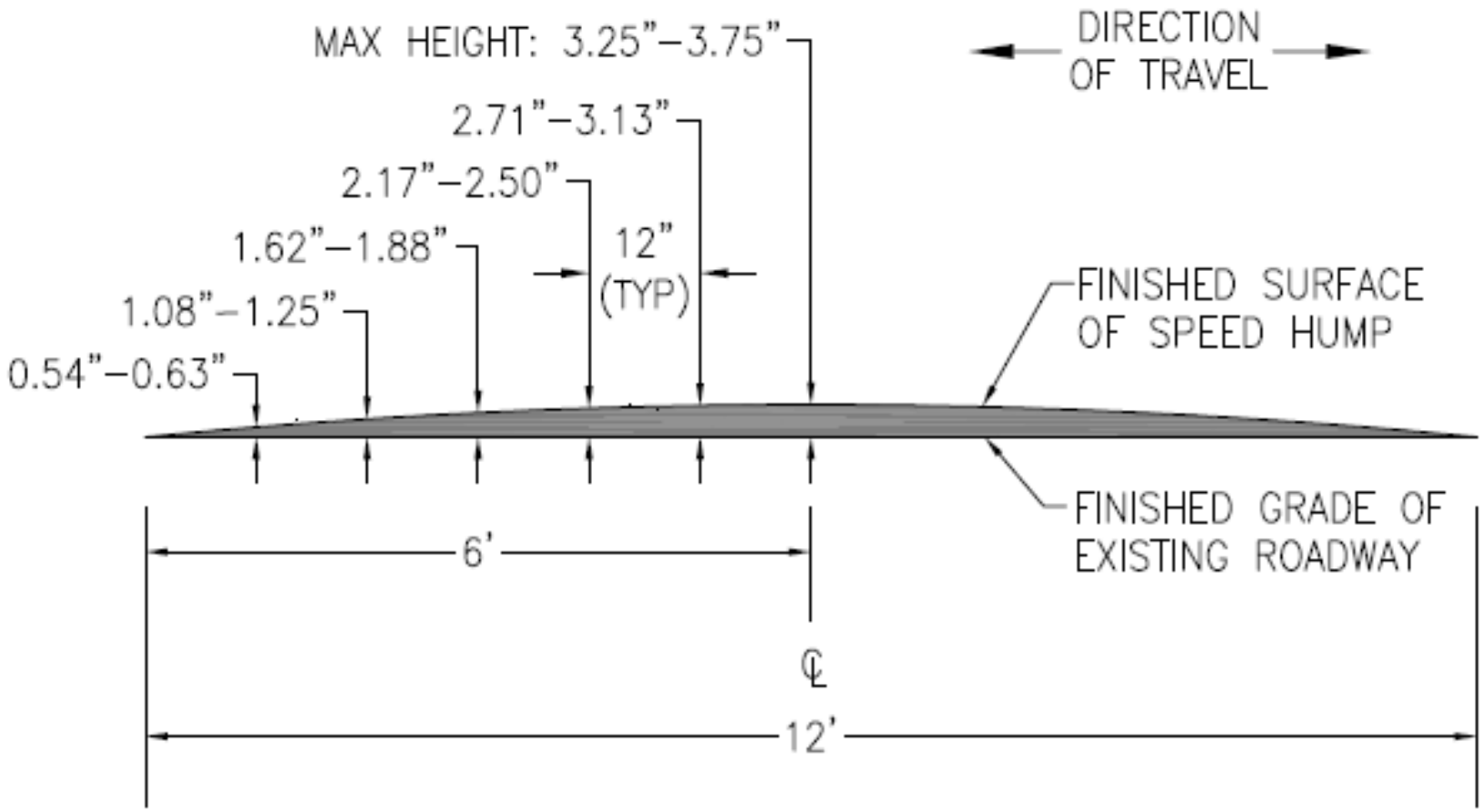

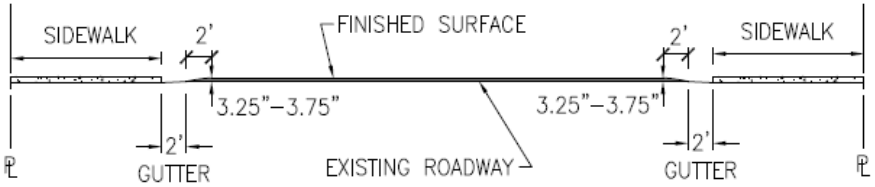

CROSS SECTION (FRONT VIEW)
(NTS)

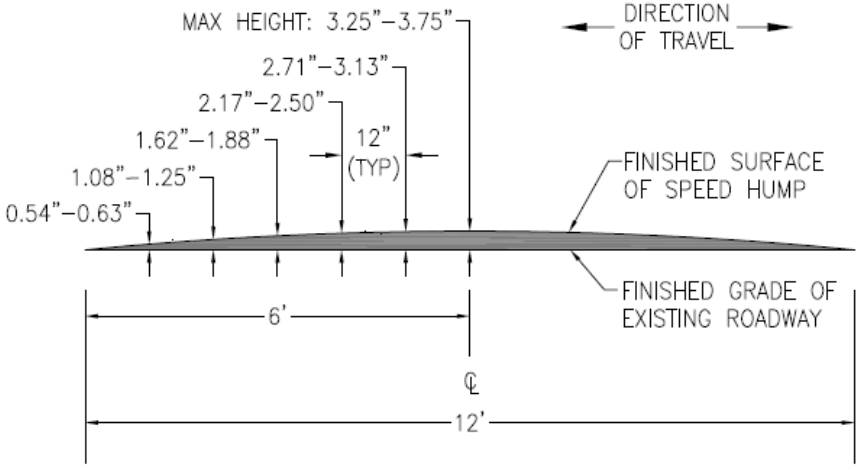

NOTE: VERTICAL MEASUREMENTS SHOWN TO THE LEFT OF CENTERLINE ARE MIRRORED ON THE RIGHT HALF OF SPEED HUMP.

PROFILE SECTION (SIDE VIEW)
(NTS)

PLAN VIEW (TOP VIEW)
(NTS)

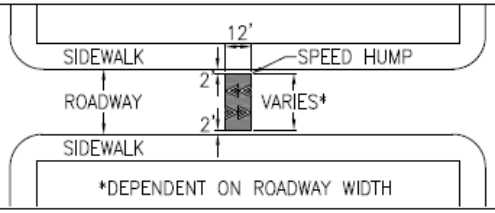

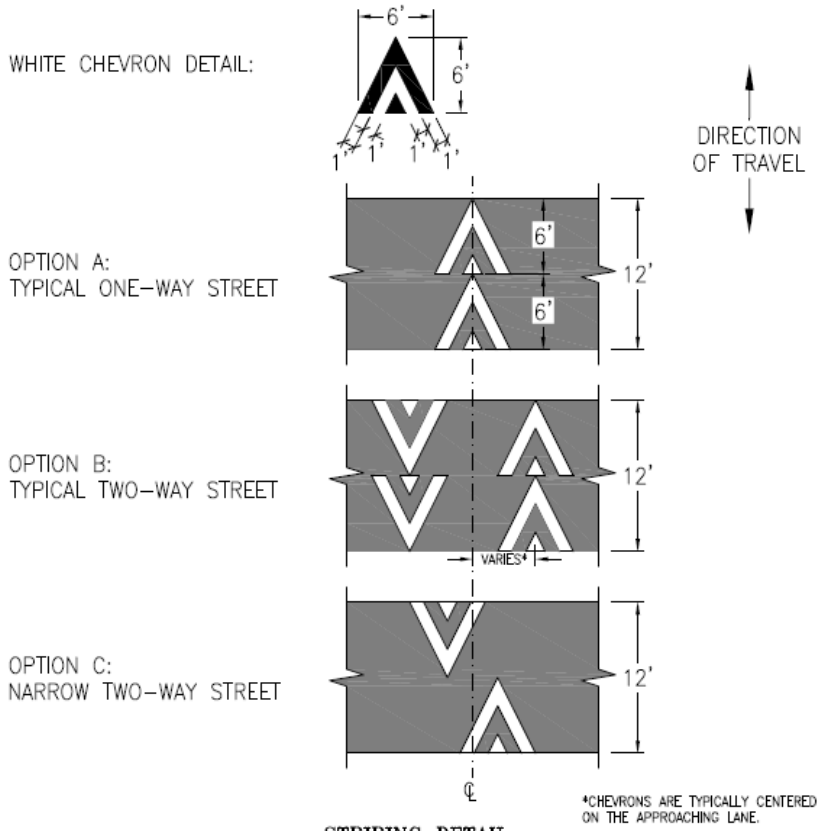

*CHEVRONS ARE TYPICALLY CENTERED ON THE APPROACHING LANE.

STRIPING DETAIL
(NTS)

NO.	DATE	DESCRIPTION	BY	APP
3	07/01/13	MODIFY STRIPING DETAIL, VARIOUS REFORMATTING.	G.HO	M.SALLABERRY
2	08/07/18	REMOVED SCALE BARS	W.TARAJONDA	M.SALLABERRY
1	05/01/13	AMENDED DET. FOR VARIOUS HUMPS; REPLACED LEGEND W/"HUMP"	C.BECK	G.De LEON

TABLE OF REVISIONS
CHECK WITH TRACING TO SEE IF YOU HAVE LATEST REVISION

SFMTA
Municipal Transportation Agency

DRAWN: A.GUBSER/P.LOUIE DATE: 12/08/04
CHECKED: M.VELASO DATE: 12/08/04

APPROVED
MANITO VELASCO 12/08/04
SENIOR ENGINEER DATE
JACK L. FLECK 12/08/04
CITY TRAFFIC ENGINEER DATE

SCALE: NTS
SHEET/SHEETS: 1 OF 4

STANDARD PLAN
SPEED HUMP

CONTRACT NO.
DRAWING NO. STR-7687
FILE NO.
REV. NO. 3

FILE NAME
DATE: —/—/—