In-Road Warning Lights: Revisiting Pedestrian Crosswalk Application

Faisal Hamood, Emelinda M. Parentela, Zaki Mustafa and Crystal Killian

Abstract

This paper presents a case study on the condition of the in-road warning lights at the intersection of 25th Street and Moray Avenue in the City of Los Angeles, ten years after its implementation. The study addresses intersection safety, driver compliance, public opinion, and product evaluation.

The in-road warning light system was commissioned in March 2004 and was upgraded in December 2014. To determine product depreciation over time with traffic flow, the old internally illuminated in-road markers were recovered and three randomly selected markers were tested for light output. The results show 4.25%/year light output depreciation for the 2004, and 2006 units. The manufacturer claims up to 3000ft daytime visibility for the 2014 internally illuminated markers.

Historical accident data obtained from the City of Los Angeles showed seven injury accidents involving pedestrians at this intersection in a span of 10 years. Public opinion survey conducted in December 2014, showed that most pedestrians perceive the intersection to be fairly safe to moderately safe. Drivers seem to have a slightly higher safety perception.

Results of driver compliance observation show that on a staged crossing, around 70-90 percent of drivers yield to pedestrians when the LED lights are activated. When the crossing was staged and the LED lights were not activated, less than 40 percent of the drivers yield to pedestrian at daytime. A higher driver compliance of 64 percent was observed at night time. Driver compliance on real pedestrian crossings was 75-94 percent when the LED lights were activated.

Introduction

The new strategic vision of Los Angeles Department of Transportation (LADOT) to eliminate Los Angeles (LA) traffic deaths by 2025 was set into motion by the end of 2014. One of the goals is to identify safety-related improvements that can be bundled into infrastructure projects. According to the published strategic plan, vehicle crashes are the third leading cause of preventable death, and the single highest cause of death for children ages one through four in Los Angeles. Furthermore, according to the report, 95% of pedestrians survive collisions with vehicles traveling 20 mph or below, but 85% of pedestrians are killed in collisions where vehicles are traveling 40 mph or higher. A summary of LA pedestrian statistics is shown in Figure 1.

The purpose of this study is to identify if in-road warning lights (IRWL) provide a safe long term solution for wide roadway crosswalks by evaluating quality and durability, compliance and safety, and public opinion. These parameters are chosen specifically based on common perceptions and requirements of the tested safety treatment. Historically, quality and durability of in-road warning lights (IRWL) have been a main source of deterrence for utilizing this technology. Compliance and safety are the main drivers for using IRWL as a warning device at crosswalks. Finally, public opinion is important since this is a public device used by citizens, and their perception of safety is important.

Figure 1: LA Pedestrian Statistics [3]

Location and Demographic

This study evaluated a 10 year old crosswalk with IRWL in the Los Angeles area to identify the treatment's successes and failures, outcomes, and safety recommendations for the region's strategic plan. Figure 2 shows the location, traffic volume and speed limits, and average demographics of the area. Since compliance, and public opinion are key parameters, sociological data and location are important variables in understanding any results.

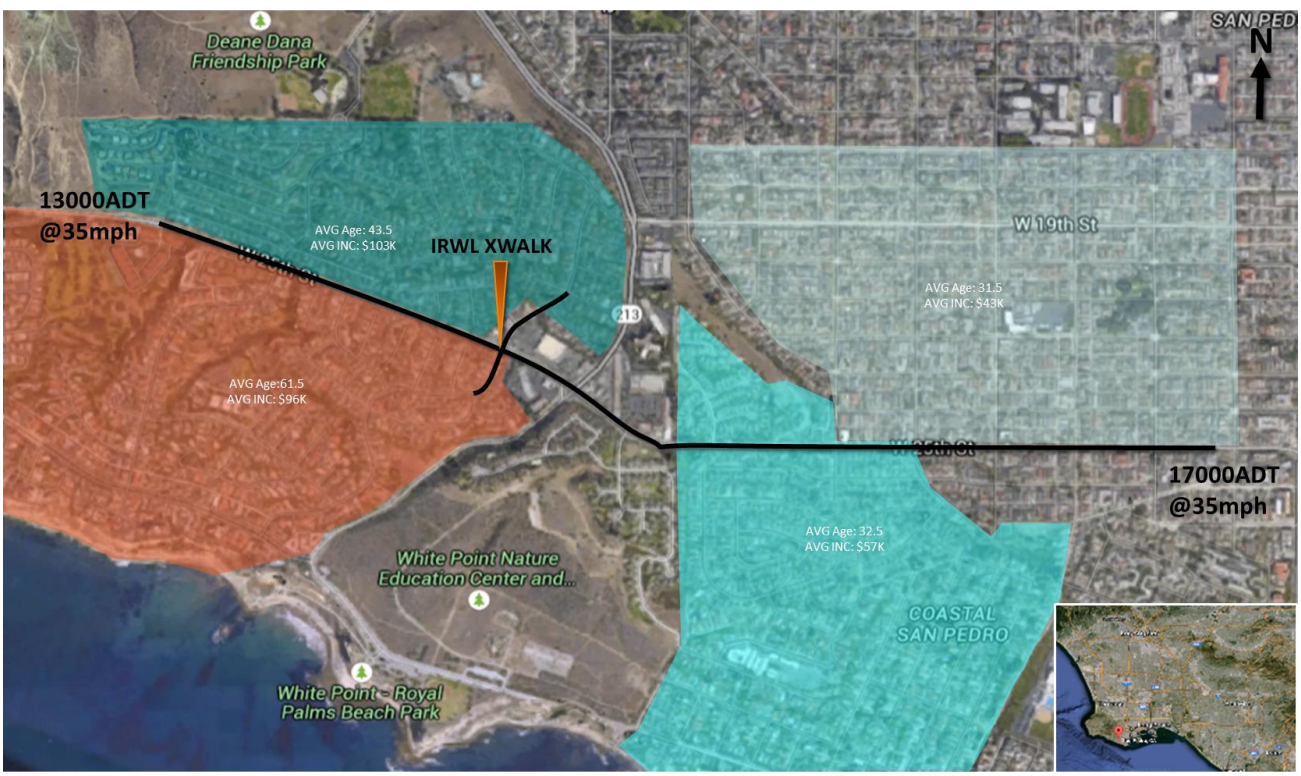

Figure 2: Crosswalk Location and Demographic [1]

For this location, LaneLights were used as the IRWL. Figure 3 section briefly introduces the product specifications for reference.

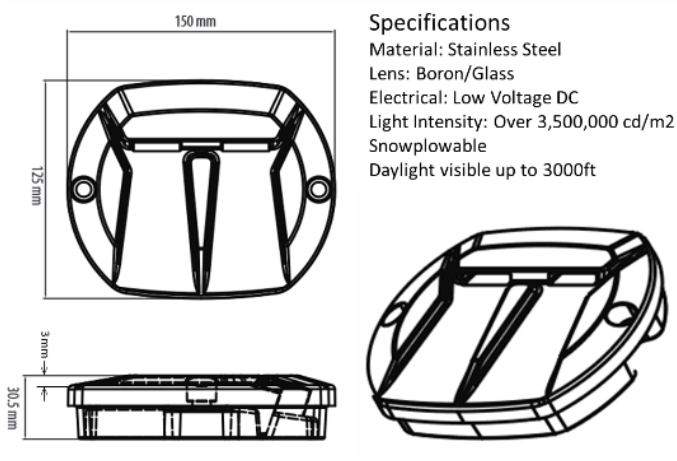

Figure 3: LaneLight Specifications [2]

Evaluation Methodology

The crosswalk was evaluated on two key parameters to determine if the use of IRWL on wide roads are reliable, effective, and trustworthy. The key parameters discussed below are reliability and compliance.

Reliability. The in-road warning lights (IRWL) were upgraded to the latest version, and the old units were taken back for assessment, refurbishment, and restocking at the LADOT's signal shop for future projects. The IRWL or LaneLights (commercial name) were assessed for mechanical, electronic, and light output damage and/or depreciation. The old LaneLights were evaluated against the new LaneLights which are 10 years ahead with at least 3 design revisions. Mechanical or physical inspection was performed to note any broken, chipped, and/or scratched material including that of the lenses. Electrical testing was done to note power consumption, short or open circuit faults, and operating voltages. These values were compared to the rated specifications to identify circuit depreciation, LED failure, and operational power drifting. Photometric assessment was performed to compare light output depreciation to the original factory specifications, and to identify dirt collection effects, lens damage effects, LED failure, and life expectancy.

These quantities provide a detailed reliability report in identifying failures, possible failures, and depreciation values of the LaneLight IRWL. LaneLight is a specific brand of IRWL that is tested in this location. Since no North American standards or values exist for IRWL testing, the authors of this study have developed a reliability test using key mechanical, electrical, and photometric German standards.

Compliance. It is important to define compliance in the state of California in order to properly identify when a vehicle is compliant. Section 21950 of the California state vehicle code is referenced below.

```
21950.(a) The driver of a vehicle shall yield the right-of-way to
        a pedestrian crossing the roadway within any marked crosswalk or
        within any unmarked crosswalk at an intersection, except as otherwise
        provided in this chapter.
      (b) This section does not relieve a pedestrian from the duty of
        using due care for his or her safety. No pedestrian may suddenly
        leave a curb or other place of safety and walk or run into the path
        of a vehicle that is so close as to constitute an immediate hazard.
        No pedestrian may unnecessarily stop or delay traffic while in a
        marked or unmarked crosswalk.
```

That is, a crossing is initiated once the pedestrian steps off the curb and enters the crosswalk. Pedestrians are required to actuate any warning devices available, look for traffic, and enter the crosswalk slowly and cautiously. However, for the purposes of this study we define driver yielding on a crosswalk as: the act of stopping for a pedestrian as they stand on the curb and attempt to begin a crossing.

Compliance data was collected by lane. Figure 4 shows the lane designation. When a system is activated on the north side compliance is recorded for all lanes including Lanes C and D. Similarly for the south side. Compliance is calculated using the equation below.

$$Compliance = \frac{Number\ of vehicles\ yielded}{(Number\ of\ Vehicle\ Passing + Number\ of\ Vehicles\ Yielded)} * 100\%$$

For example, where four vehicles passed that should have yielded and the fifth vehicle yielded (recorded as 4-1), and the pedestrian crossed, the motorist yielding compliance is 1/5 or 20%. If zero vehicle passed zero vehicles passed that should have yielded, and two vehicles on separate lanes yielded, and pedestrian crossed (recorded as 0-2), the motorist yielding compliance = 2/2 or 100%.

Figure 4: Lane Designation

Public Opinion Survey. A public opinion survey was performed. The survey was carefully crafted to answer the key questions: How safe is the pedestrian's perception of this crosswalk? How safe is the driver's perception of the crosswalk? Do the IRWL's help drivers see and identify pedestrians?

The survey's purpose is to gather an unbiased none-IRWL specific answer from subjects. Once the survey was filled, a discussion about the IRWL was pursued to identify personal opinion.

Analysis of Results

The results of this study were processed in detail. A summary of the key findings for each section are presented below.

Product Reliability. LaneLights were initially installed in 2004 as shown in 5. Figure 66 shows the crosswalk 10 years later. Figure 7 shows the product's timeline and replaced units. Six out of 28 units in total were replaced. The causes for replacement include dim lights, and burnt Light Emitting Diodes (LEDs). The original installation and replacements were performed by LADOT staff. The decision to upgrade the lights in 2014 was to increase life expectancy, and light output.

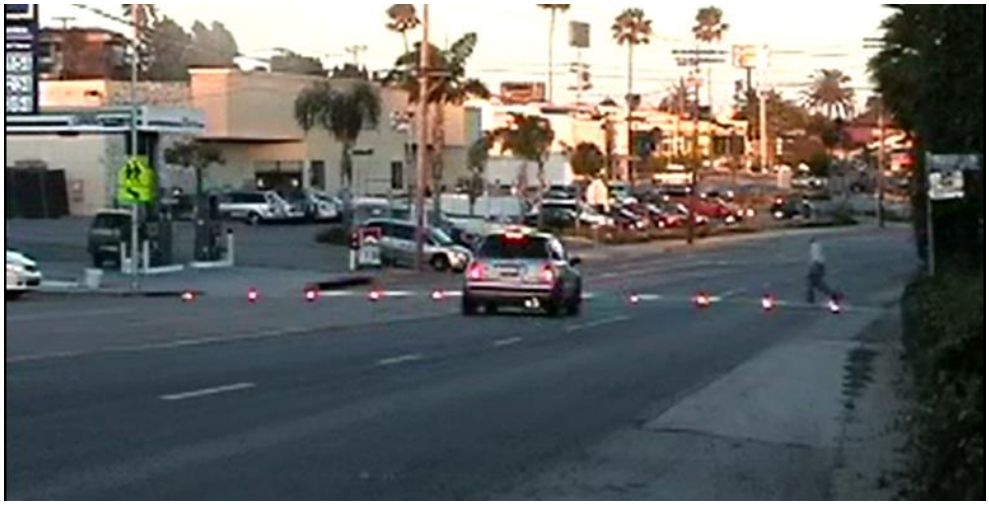

Figure 5: Crosswalk 2004

Figure 6: Crosswalk 2014

The recovered units were tested to assess their current condition. Figure 8 shows a few samples of the recovered LaneLights. The findings show the following:

i) Mechanical inspection: No physical damage, rust, or abrasion. Lenses are in acceptable condition, and dirt collection is limited to areas away from the lenses.
ii) Electrical testing: No power draw difference, voltage range stable, minimal connection damage but no fatal electronic or wire corrosion.
iii) Photometric testing: 4.3% light output depreciation per year compared to original factory specifications. However, light output values are within the daylight visible range, and remain BASt compliant (German standard).

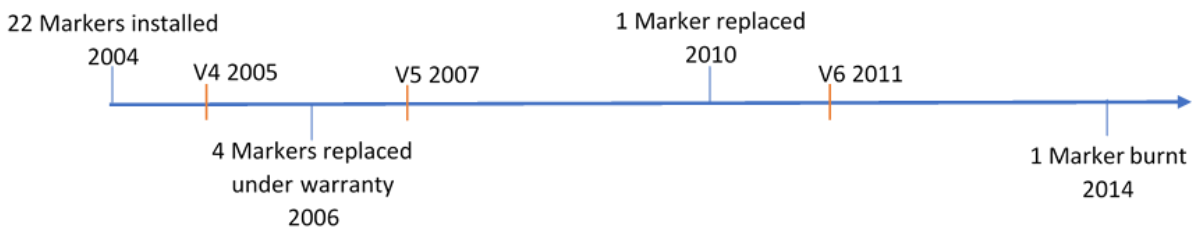

Figure 7: LaneLight Timeline

Version	Production Year	Mechanical	Electrical (W)	Photometric (LUX)
DCMLK150-V6	2014	N/A Control Unit	2.2W	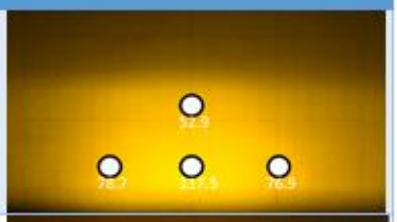
DCMLK150-V5	2010	Crushed wire. Lens OK. Structure OK.	2.5W	
DCMLK150-V4	2006	Lenses clear. Limited wire corrosion. Lens OK. Structure OK.	3W	
DCMLK150-V3	2004	Lenses clear. Wires crushed with limited corrosion. Lens OK. Structure OK.	3W	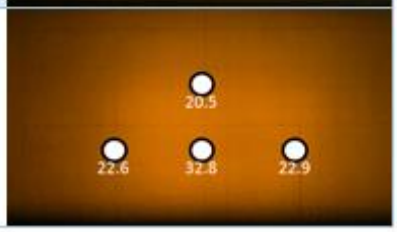

Figure 8: LaneLight Samples

Compliance Results. For this study the crosswalk was observed for two days from 9:00am to 6:30pm. In order to compare compliance at the given location, staged crossings (by authors) were made in intervals including real crossings (by citizens) to gather a significant sample size. Furthermore, un-signalized staged crossings were made to compare compliance. A summary of the results is shown in Figure 8. The results of driver compliance observation show that on a staged crossing, around 70-90 percent of drivers yield to pedestrians when the LED lights were activated. When the crossing was staged and the LED lights were not activated, less than 40 percent of the drivers yield to pedestrian at daytime. A higher driver compliance of 64 percent was observed at night time. Driver compliance on real pedestrian crossings was 75-94 percent when the LED lights were activated.

	Avg Waiting Time	Avg Crossing Time	Staged Activated Compliance	Staged – Not Activated compliance	Real Activated Compliance
Morning Dec20	6.6s	14.6s	78.9%	38.6%	93.8%
Afternoon Dec20	5.6s	14.5s	69.9%	37.1%	83.3%
Evening Dec20	4.2s	13.7s	81.5%	64.0%	75.0%
Morning Dec21	3.5s	14.5s	88.54%	N/A	75.9%

Figure 9: Compliance Results

Public Opinion. Summarizing the public opinion of 25 subjects, an average perception on fairly safe to moderately safe is found among pedestrians, with an average rating of 2.54, where 5 is exceptionally safe. Drivers perceived the crosswalk to be safer than pedestrians with an average rating of 3.0 on the rating scale where 5 is exceptionally safe. It is worth noting that age was a slight factor, with younger demographic finding the crosswalk safer. When specifically asked about the IRWL both pedestrians and drivers welcomed them versus side flashers only. When asked for suggestions, pedestrians asked for a traffic signal, while drivers did not think they were necessary and may cause congestion. Additional suggestions from pedestrians included speed traps, citing vehicle speed as a concern. A few cyclists were surveyed, and chose to identify as pedestrians. They too understood the added value of the IRWL versus side flashers only, but suggested a traffic signal as the safest solution.

Conclusion

This paper evaluates an IRWL crosswalk after 10 years of installation. The chosen product showed high durability, reliability, and high life expectancy. Moreover, compliance figures were relatively high, with the added note that compliance was recorded since activation and not with accordance to California law. Vehicles that did not yield, did attempt to slow down, and brake lights were visible. The decision to not yield while IRWL were active was a conscious one that took into account the approach speed. Finally, public perception of the IRWL as moderately safe is valuable, and encouraging to implement further of such treatments. In conclusion, the use of IRWL at multilane intersections is reliable, safe, and comfortable for both pedestrian and drivers.

References

[1] Urban Mapping, "San Pedro, CA," 2011. [Online]. Available: http://www.city-data.com/neighborhood/San-Pedro-San-Pedro-CA.html .

[2] ITEM ltd, "Specifications," 2015. [Online]. Available: http://www.itemltd.com/media/attachments/view/doc/bid_specifications_lanelight_03_2015/pdf.

[3] City of Los Angeles Department of Transportation , "Great Streets for Los Angeles Strategic Plan," City of Los Angeles, Los Angeles, 2014.